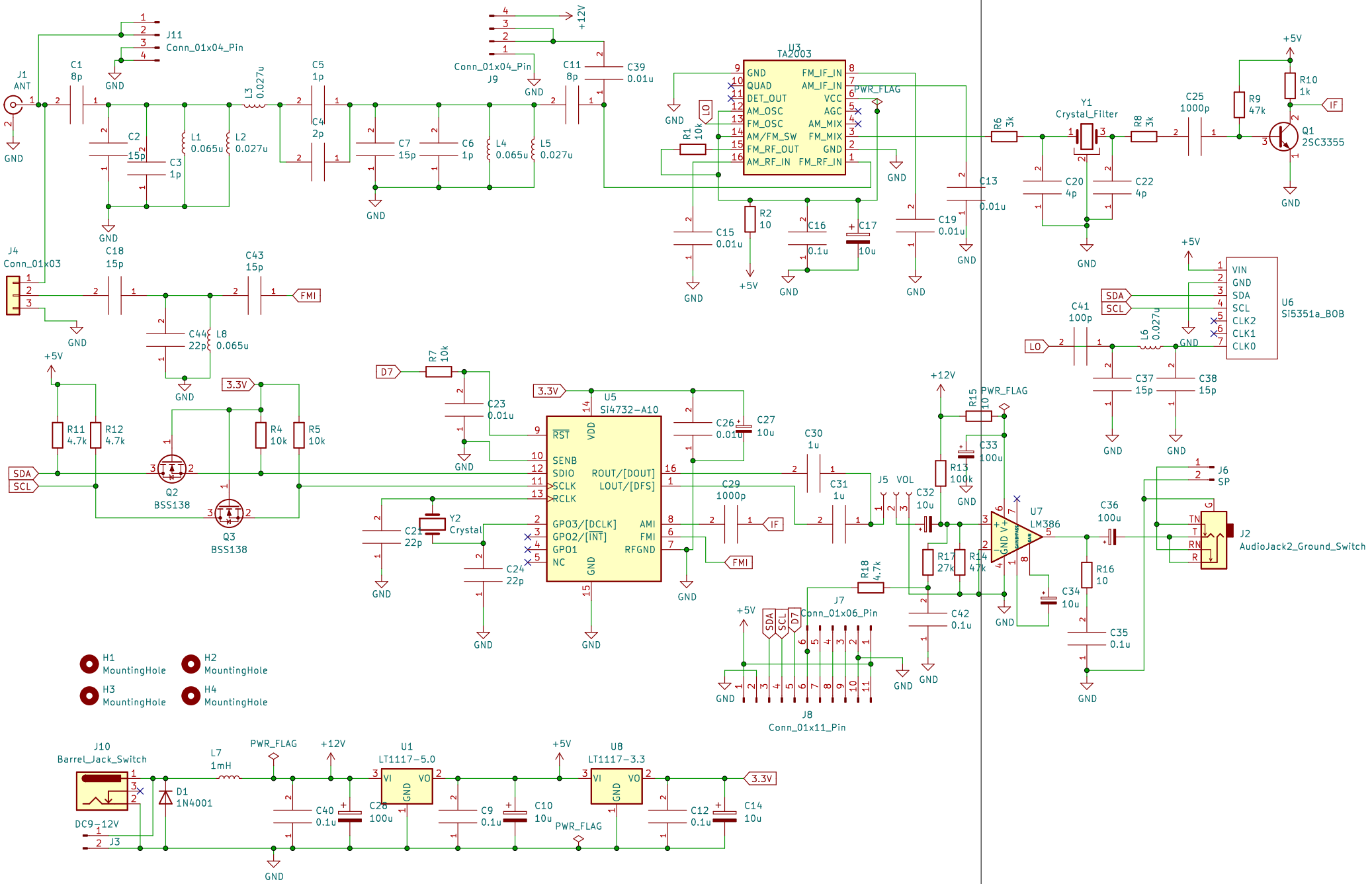
J1
ANT
C1
8p
C2
15p
C3
1p
L1
0.065u
L2
0.027u
L3
0.027u
C4
2p
C5
1p
C7
15p
C6
1p
L4
0.065u
L5
0.027u
J11
Conn_01x04_Pin
Conn_01x04_Pin
J9
+12V
C11
8p
C39
0.01u
U3
TA2003
GND
QUAD
DET_OUT
AM_OSC
FM_OSC
AM/FM_SW
FM_RF_OUT
AM_RF_IN
FM_IF_IN
AM_IF_IN
VCC
AGC
AM_MIX
FM_MIX
GND
FM_RF_IN
PWR_FLAG
LO
R1
10k
R2
10
C15
0.01u
C16
0.1u
C17
10u
C19
0.01u
C13
0.01u
R6
3k
Y1
Crystal_Filter
R8
3k
C20
4p
C22
4p
C25
1000p
R9
47k
R10
1k
IF
Q1
2SC3355
+5V
J4
Conn_01x03
C18
15p
C43
15p
FMI
C44
22p
L8
0.065u
SDA
SCL
U6
Si5351a_BOB
VIN
GND
SDA
SCL
CLK2
CLK1
CLK0
C41
100p
L6
0.027u
C37
15p
C38
15p
R11
4.7k
R12
4.7k
Q2
BSS138
Q3
BSS138
3.3V
R4
10k
R5
10k
D7
R7
10k
C23
0.01u
U5
Si4732-A10
RST
VDD
SENB
SDIO
SCLK
RCLK
ROUT/[DOUT]
LOUT/[DFS]
GPO3/[DCLK]
GPO2/[INT]
GPO1
NC
AMI
FMI
RFGND
C26
0.01u
C27
10u
C29
1000p
C30
1u
C31
1u
Y2
Crystal
C21
22p
C24
22p
R15
10
C33
100u
R13
100k
J5
VOL
C32
10u
R17
27k
R14
47k
U7
LM386
C36
100u
R16
10
C34
10u
C35
0.1u
C42
0.1u
J6
SP
J2
AudioJack2_Ground_Switch
TN
T
RN
R
R18
4.7k
J7
Conn_01x06_Pin
J8
Conn_01x11_Pin
H1
MountingHole
H2
MountingHole
H3
MountingHole
H4
MountingHole
J10
Barrel_Jack_Switch
DC9-12V
J3
D1
1N4001
L7
1mH
PWR_FLAG
U1
LT1117-5.0
VI
VO
C40
0.1u
C28
100u
C9
0.1u
C10
10u
U8
LT1117-3.3
C12
0.1u
C14
10u
GND